AGV Pack

NIDEC AGV/AMR Drive Solution

Nidec

All for dreams

NIDEC AGV/AMR SOLUTION

Nidec offers a diverse line of AGV/AMR motors in a variety of speeds, torque ranges, feedback options, connector types and mounting preferences with customizable solutions that align with your unique requirements.
Our motor controllers are high performance and loaded with numerous features and operating modes.
If space is a premium, our integrated drive solutions provide a compact, streamlined profile for precise motion control in tight spaces.
Our battery management/protection system is customizable, ultra-efficient, and delivers high current power using all Lithium Ion batteries. We're your one-stop-shop for practically everything "bot."
Nidec has a proven track-record working with industry-leading companies like yours to produce reliable and robust AGV/AMR platforms. From concept to completion, you can rest assured we'll use our Nidec know-how to help make your dreams of exceptional automation come true.
Please contact Nidec when you're ready to go further and dream bigger.

AGV/AMR Motors

AGV/AMR
Motor Controllers

Nidec
Wheel Drive Solution

AGV/AMR
Navigation Sensors

AGV/AMR Power
Management Systems

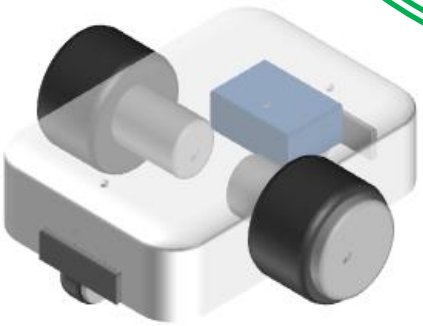

NIDEC COMPLETE COMPONENT SETS

By offering selected Motor/Wheels assemblies NIDEC now has the industry's most complete sets of components for building AGVs or Mobile Robots. All these components are designed to work together as one, allowing our Engineers to help you with your entire project. All of our products are programmable and easily interface to computers or PLCs. To ease your integration task, NIDEC offers a powerful Setup and Monitoring PC utility, samples scripts, Linux/Windows API's, drivers for Robot Operating System, and Robot Simulator.

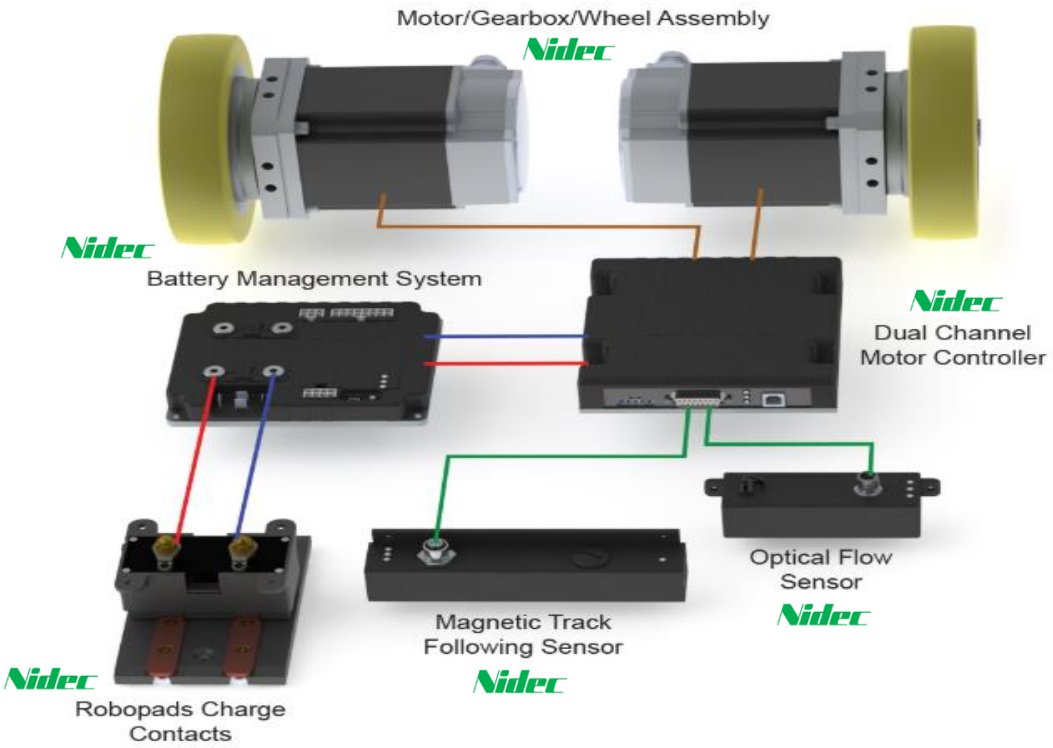

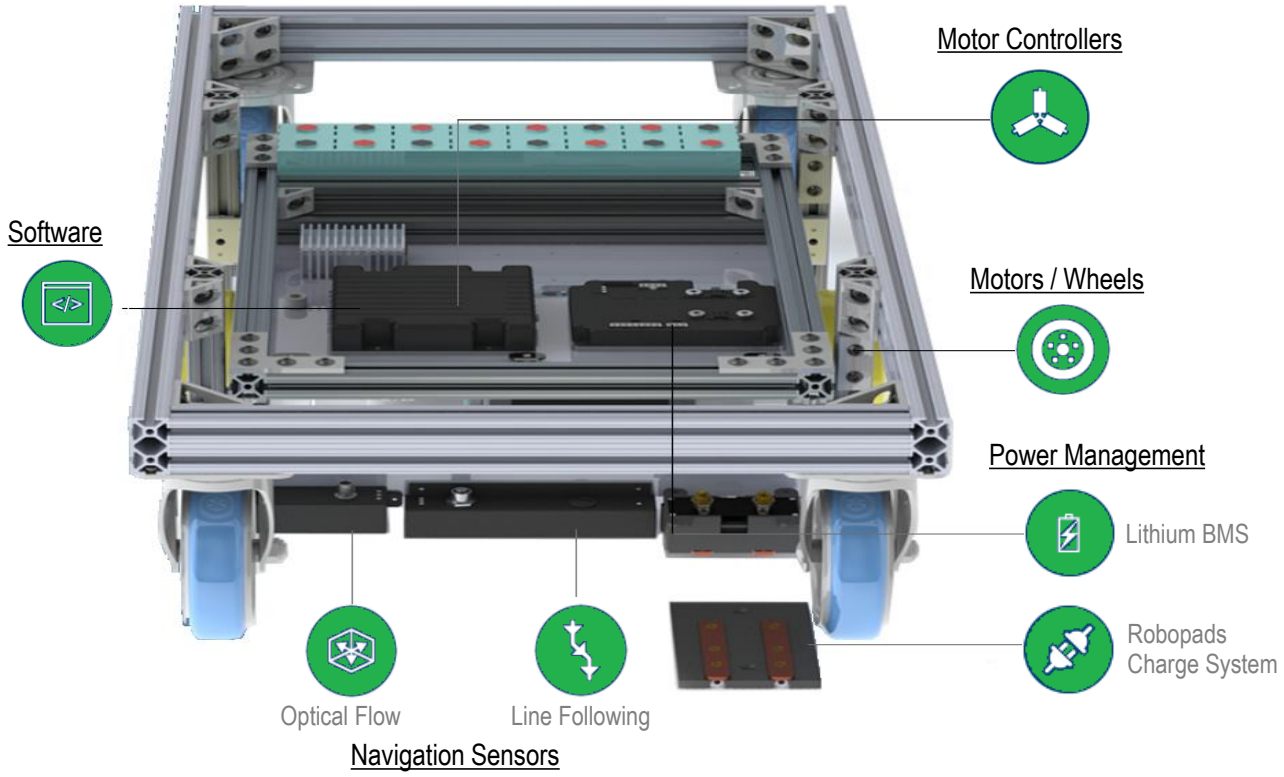

NIDEC Motors

Model LD <Standard Type>

- Motor Voltage : 48 VDC
- Payload : maximum 1200 kg
- Wheel rotational speed : maximum 300 min^{-1}
- Output torque : maximum 225 Nm

Model SU <High Payload Type>

- Motor Voltage : 48 VDC
- Payload : maximum 1800 kg
- Wheel rotational speed : maximum 190 min^{-1}
- Output torque : maximum 60 Nm

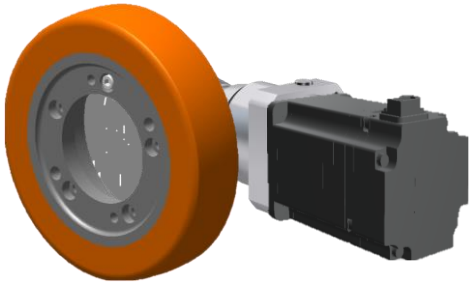

Model RA <Compact Type>

- Motor Voltage : 48 VDC
- Payload : maximum 1000 kg
- Wheel rotational speed : maximum 1000 min^{-1}
- Output torque : maximum 260 Nm

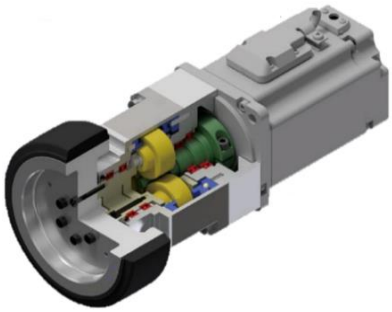

Model TD <Silent Type>

- Motor Voltage : 48 VDC
- Payload : maximum 30 kg
- Wheel rotational speed : maximum 300 min^{-1}
- Output torque : maximum 19 Nm

Model HD <Omnidirectional Drive>

- Motor Voltage : 48 VDC
- Payload : maximum 150 kg
- Wheel drive speed : maximum 60 m/min
- Output torque : maximum 42 Nm

NIDEC Controllers

Model SBL <Low Power Compact>

- Motor Type : Brushless DC
- Maximum Voltage : 96
- Maximum Number of Channels : 1
- Maximum Amps per Channels : 60

Model KBL <Mid Power>

- Motor Type : Brushless DC
- Maximum Voltage : 60
- Maximum Number of Channels : 1
- Maximum Amps per Channels : 120

Model FBL <Advanced Features>

- Motor Type : Brushless DC
- Maximum Voltage : 60 DCV
- Maximum Number of Channels : 2
- Maximum Amps per Channels : 120

Model HBL <High Power>

- Motor Type : Brushless DC
- Maximum Voltage : 120 DCV
- Maximum Number of Channels : 2
- Maximum Amps per Channels : 150

Model GBL <Ultra High Power>

- Motor Type : Brushless DC
- Maximum Voltage : 120 DCV
- Maximum Number of Channels : 2
- Maximum Amps per Channels : 400

NIDEC Navigation Sensors

Model MGS <Magnetic Sensor>

Precision magnetic sensor for detecting and measuring the position of a magnetic track along the horizontal axis, for use with Automatic Guided Vehicles and other Automation applications.
Interfaces seamlessly with Nidec motor controllers. Utilizes USB, RS232, and CAN for interfacing to any PLC, microcomputer or PC.

Model MTAPE <Magnetic Tape>

Flexible magnetic tape with high-bond adhesive for laying magnetic tracks. Available in 45m rolls of 25mm or 50mm width, and 1.1mm thick. Precise and uniform magnetic strength across the full width and length. Magnetic South side on top. Short segments of North side tape available for use as Markers. Made of very durable material capable of withstanding foot and light vehicle traffic.

Model FLW <Optical Type>

High-resolution sensors designed for accurate contactless X-Y displacement and rotation measurement over all types of floor surface. Intended as a navigation sensor or as a contactless safety encoder in wheeled mobile robot applications.

NIDEC Power Management Systems

Model BMS <BMS Contoroller>

Battery Management and Protection Systems for building high current power sources using low cost Lithium Battery cells of 6 to 15 battery cells. Built-in Precision voltage sensors and current sensors for accurate State of Charge and State of Health monitoring. Built-in switches to load and charger. Overload, short-circuit, over or under voltage, or over temperature protection. USB, CANbus, RS485, PWM or Bluetooth (optional) Communication.

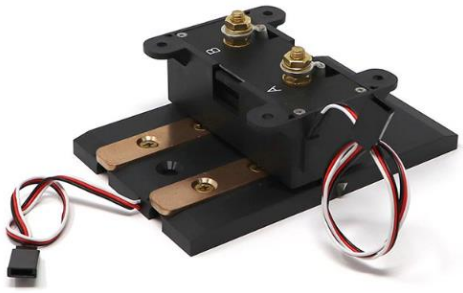

Model RP <R/P Charge System>

Ultra-low Profile, high current charging contacts solution for mobile robots and Automated Guided Vehicles (AGV). Composed of a charge contacts base, and a collector unit with extendable contacts, mounted on the robot. RoboPads utilize magnets to control the connection and disconnection action automatically, while using no additional power from the mobile systems batteries.

Model SR <Shunt Regulators>

Protection subsystems for dissipating the regenerative energy when braking or drastically reducing the speed of electric motors. Works by monitoring the system's supply voltage and instantly applying a two-level resistive load during overvoltage conditions to absorb up to 5 kilowatt of excess energy and bring voltages back to safe levels.

Nidec

All for dreams